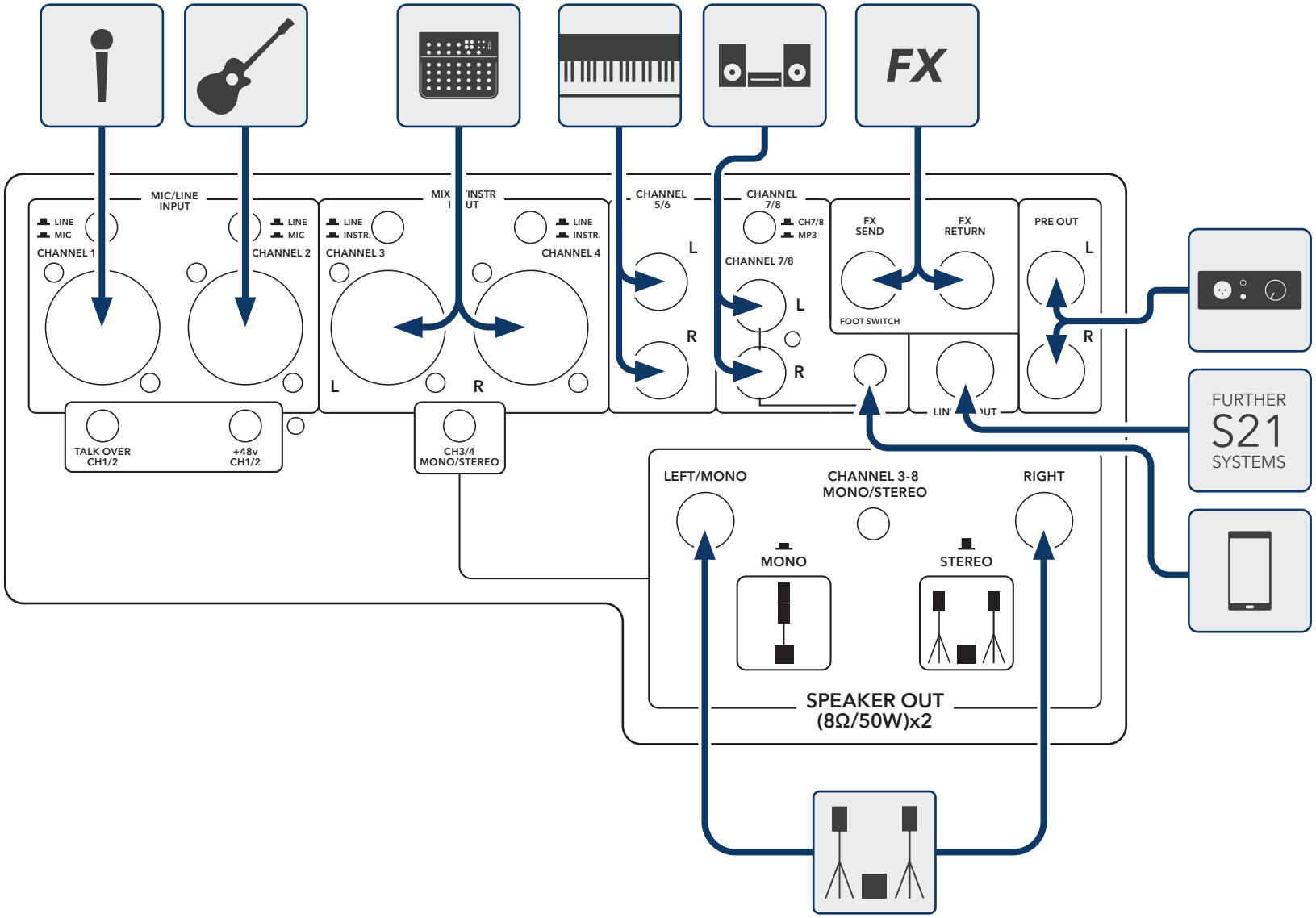
FX
MIC/LINE INPUT
LINE
MIC
CHANNEL 1
CHANNEL 2
LINE
INSTR.
CHANNEL 3
CHANNEL 4
CHANNEL 5/6
CHANNEL 7/8
CH7/8
MP3
FX SEND
FX RETURN
FOOT SWITCH
PRE OUT
L
R
TALK OVER CH1/2
+48v CH1/2
CH3/4 MONO/STEREO
LEFT/MONO
CHANNEL 3-8 MONO/STEREO
RIGHT
MONO
STEREO
SPEAKER OUT (8Ω/50W)x2
FURTHER S21 SYSTEMS